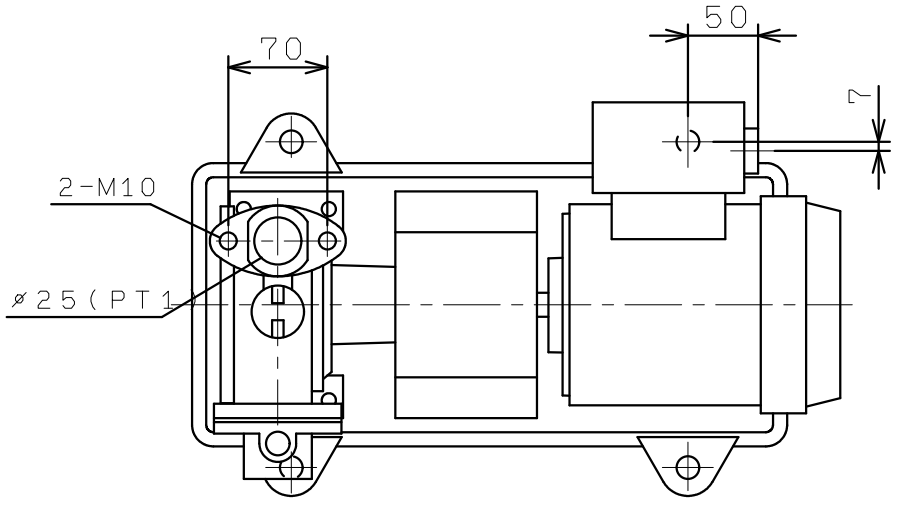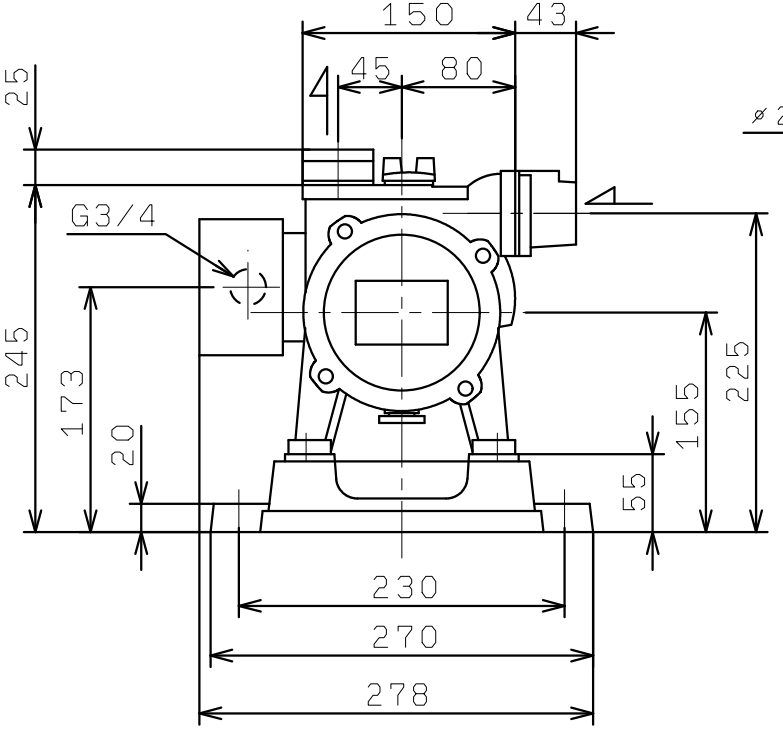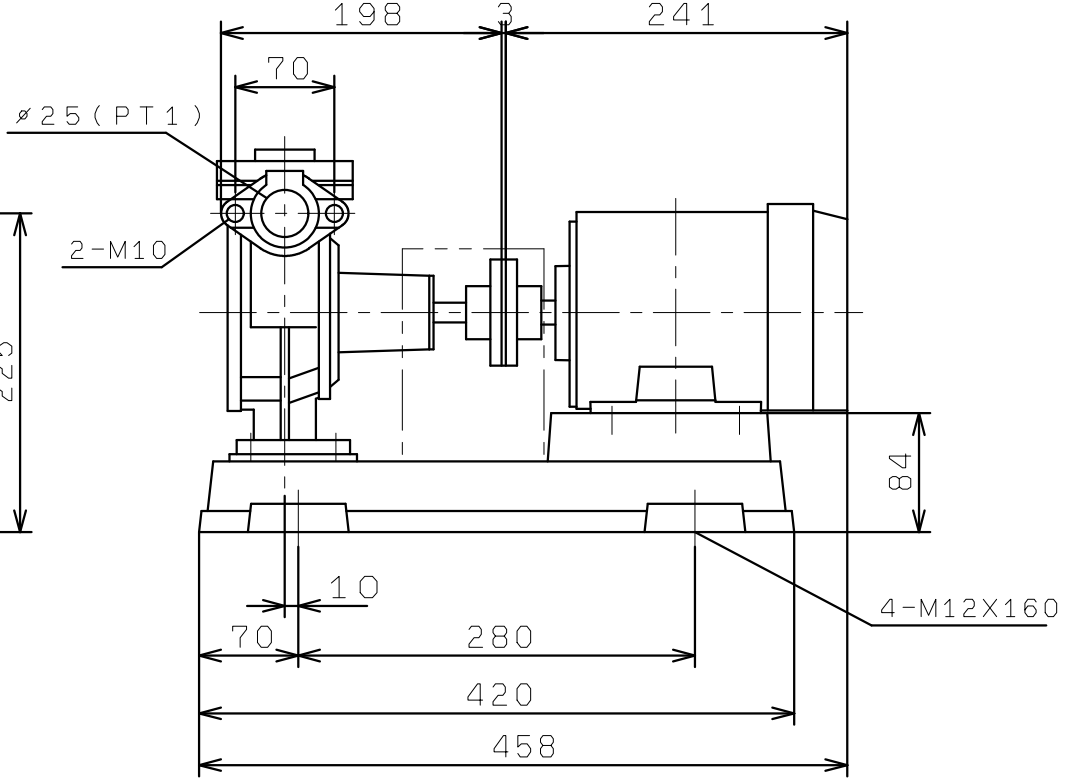# CS2-255MNO.4T
# VC30